Scale: 1:1	Date Checked: 2/21/23

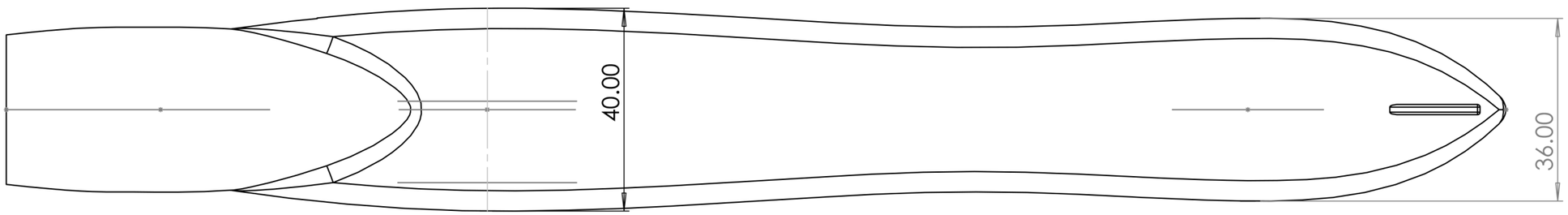

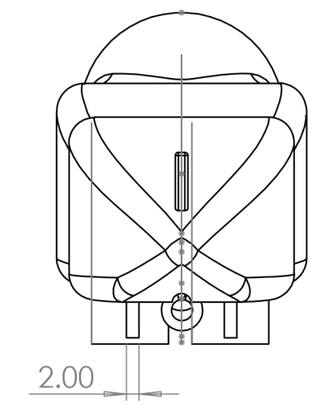

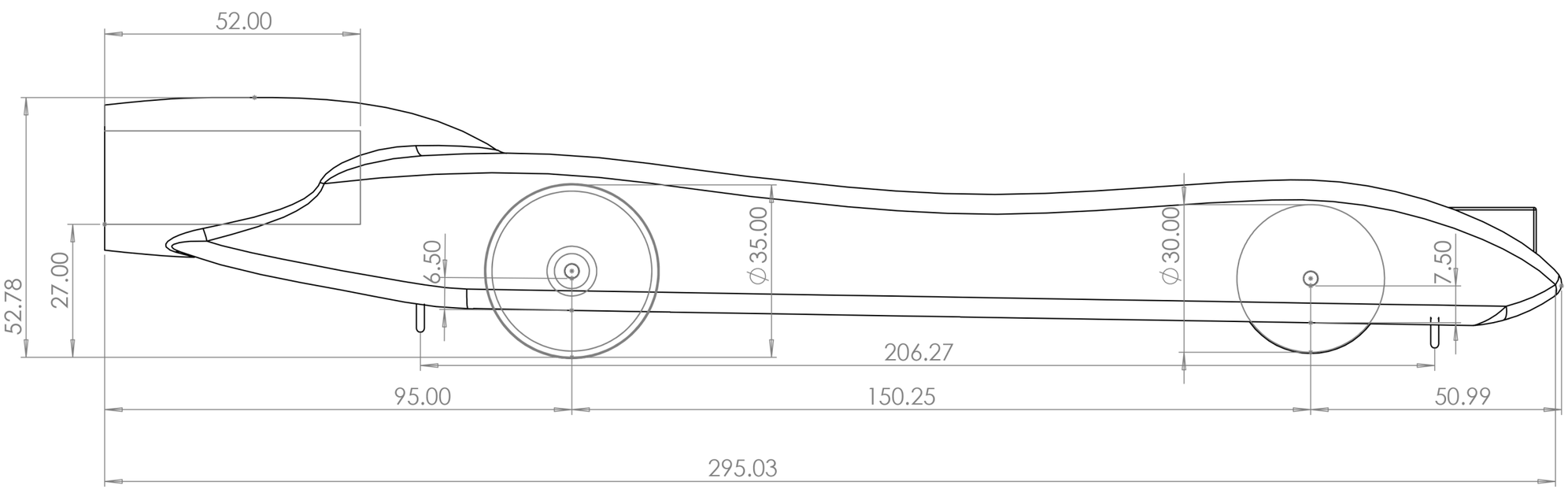

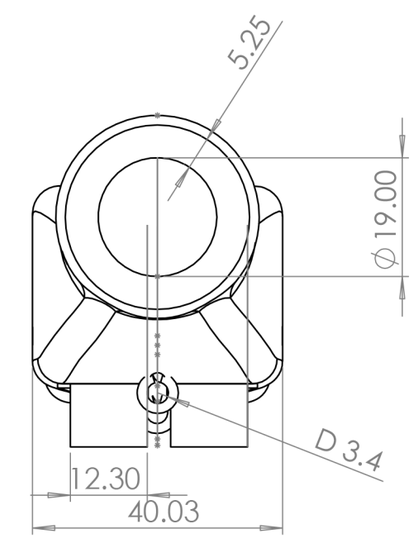

SOLIDWORKS Educational Product. For Instructional Use Only.